120x120x32mm (4.72x4.72x1.26in) - 5 blade

Bearing System— 2 Ball Bearing,
Life Expectancy--- Ball 70000hrs@ 25℃
Frame---------- Thermoplastic PBT+30% GF, UL94-V0
Impeller---------- Thermoplastic PBT+15% GF, UL94-V0
Lead Wire---------- UL 1007, AWG 24, 240±10mm, Red(+), Black(-)
Protection---------- Locked rotor protection
IP Grade ---------- Optional

RoHS

Dim: 454x328x295mm
N.W.: 11.2 kgs
G.W.: 13.2 kgs
Q'TY: 40 pcs

FUNCTIONS	PART NUMBER	RATED (VDC)	LABEL CURRENT	ACTUAL CURRENT	POWER (WATTS)	SPEED (RPM)	AIRFLOW (CFM)	AIRFLOW (m^3/min)	PRESSURE (mmAq)	PRESSURE (In H^2O)	NOISE (dBA)	WEIGHT (Q'TY/CTN)
1b:AS 2a:FG 2b:RD 2c:RDb 2d:LD 1a:IR 6:CL 3c:PPWM 3a:VPWM 5a:TPWM 5b:RPWM 3b:IPWM 7a:CS	K1232X12BPLBxy-5	12	2.826	1.760	21.12	5200	215.11	6.09	25.09	0.99	60.73	280g
	K1232H12BPLBxy-5	(08~14)	1.767	1.310	15.72	4700	194.42	5.51	20.50	0.81	58.10	(40pcs)
	K1232Y24BPLBxy-5	24	1.710	1.353	32.46	5800	239.93	6.79	31.22	1.23	64.51	280g
	K1232X24BPLBxy-5	(15~27)	1.153	0.975	23.39	5200	215.11	6.09	25.09	0.99	60.73	(40pcs)
	K1232H24BPLBxy-5		0.882	0.720	17.27	4700	194.42	5.51	20.50	0.81	58.10	
	K1232Y48BPLBxy-5	48	1.211	0.637	30.60	5800	239.93	6.79	31.22	1.23	64.51	280g
	K1232X48BPLBxy-5	(36~57)	0.778	0.459	22.05	5200	215.11	6.09	25.09	0.99	60.73	(40pcs)
	K1232H48BPLBxy-5		0.574	0.368	17.66	4700	194.42	5.51	20.50	0.81	58.10	
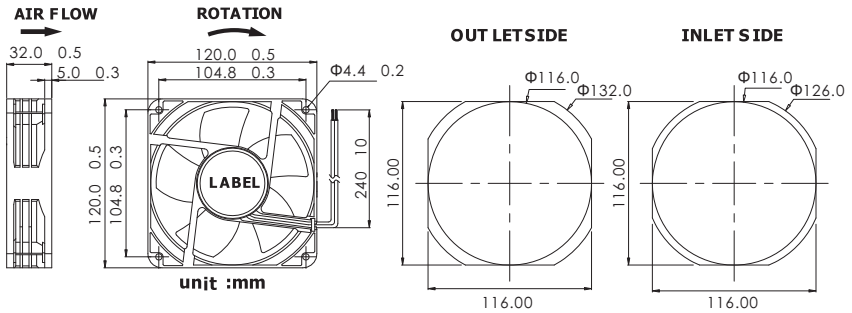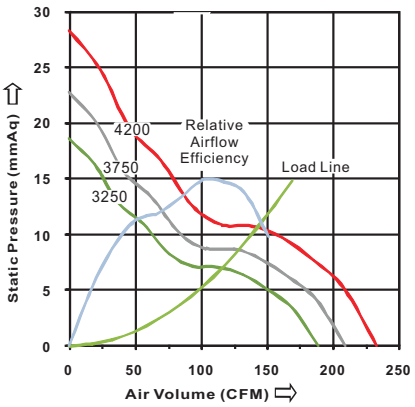
Remark:
1. Part no. suffix: "xy"=Function detail or "x"=Function number, "y"=customer ID
2. K series - Multifunction Extra High Performance.:
   Use a single coil differential type drive with the highest efficiency and the maximum airflow performance with the complete line of functions and with Airflow and Pressure higher than the P series.